FISHMAN FLUENCE™

Thomas McRocklin 2 Humbucker Set - Custom Open Core

1 x Volume

1 x Tone: Pull for Voice-2 Bridge & Neck (slide switch 1, 3, 5)

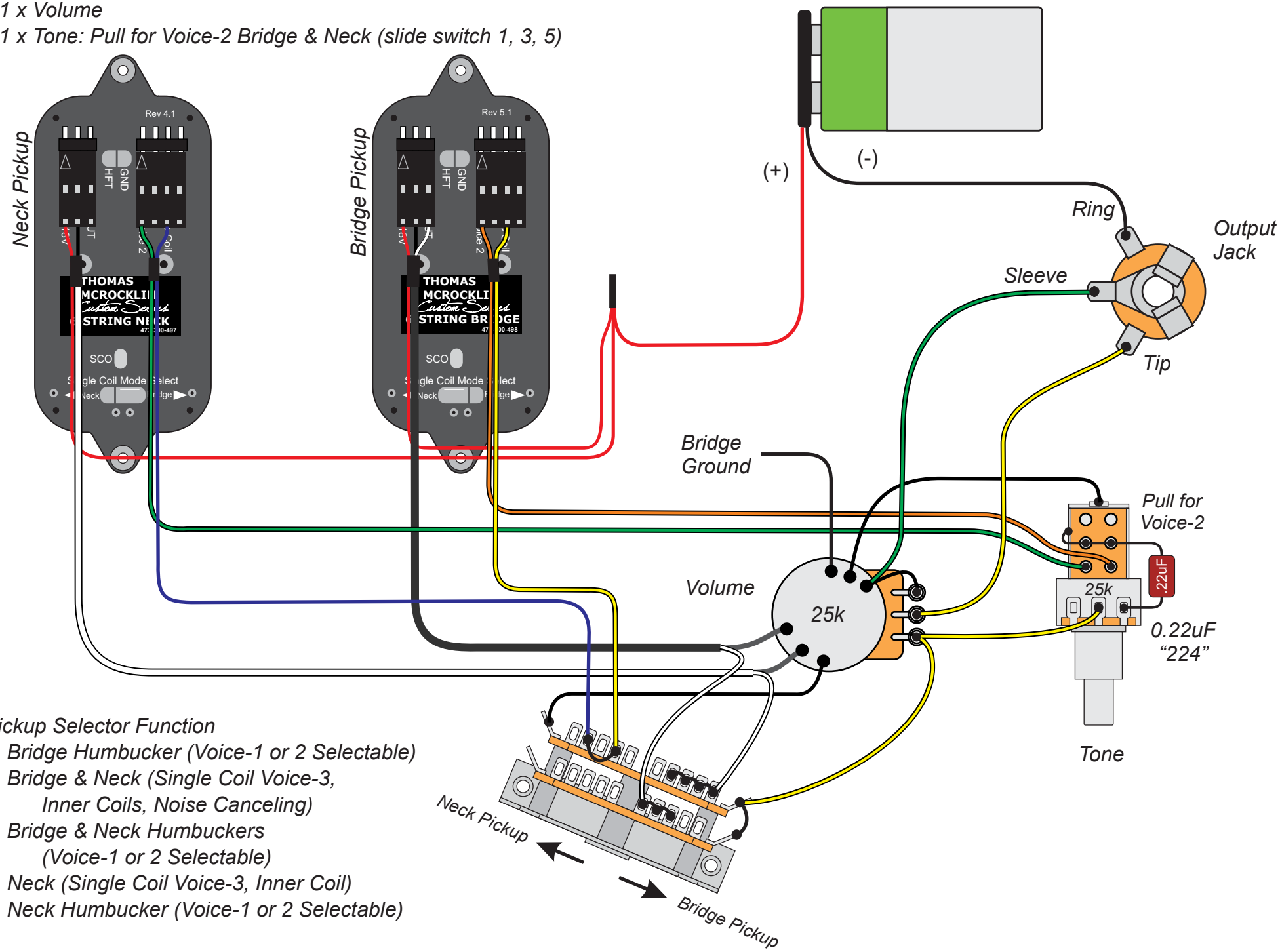

Pickup Selector Function

1. Bridge Humbucker (Voice-1 or 2 Selectable)

2. Bridge & Neck (Single Coil Voice-3, Inner Coils, Noise Canceling)

3. Bridge & Neck Humbuckers (Voice-1 or 2 Selectable)

4. Neck (Single Coil Voice-3, Inner Coil)

5. Neck Humbucker (Voice-1 or 2 Selectable)